# SRC20ZSX-W,-S SRC25ZSX-W,-S SRC35ZSX-W,-S
# SRC40ZSX-W,-S SRC50ZSX-W,-S SRC60ZSX-W,-S SRC63ZR-W,-S

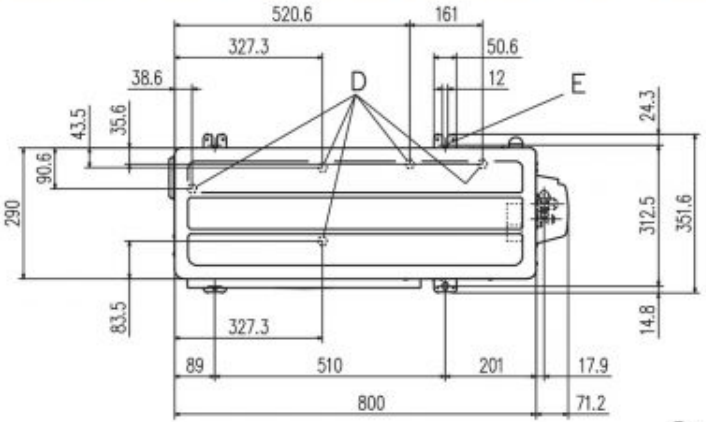


| Symbol | Content | |
|---|---|---|
| A | Service valve connection (gas side) | 20,25,35 ϕ9.52(3/8")(Flare)<br>40,50,60,63 ϕ12.7(1/2")(Flare) |
| B | Service valve connection (liquid side) | ϕ6.35 (1/4") (Flare) |
| C | Pipe/cable draw-out hole | |
| D | Drain discharge hole | ϕ20×5places |
| E | Anchor bolt hole | M10×4places |

Minimum installation space

| Examples of installation / Dimensions | I | II | III | IV |
|---|---|---|---|---|
| L1 | Open | 280 | 280 | 180 |
| L2 | 100 | 75 | Open | Open |
| L3 | 100 | 80 | 80 | 80 |
| L4 | 250 | Open | 250 | Open |

